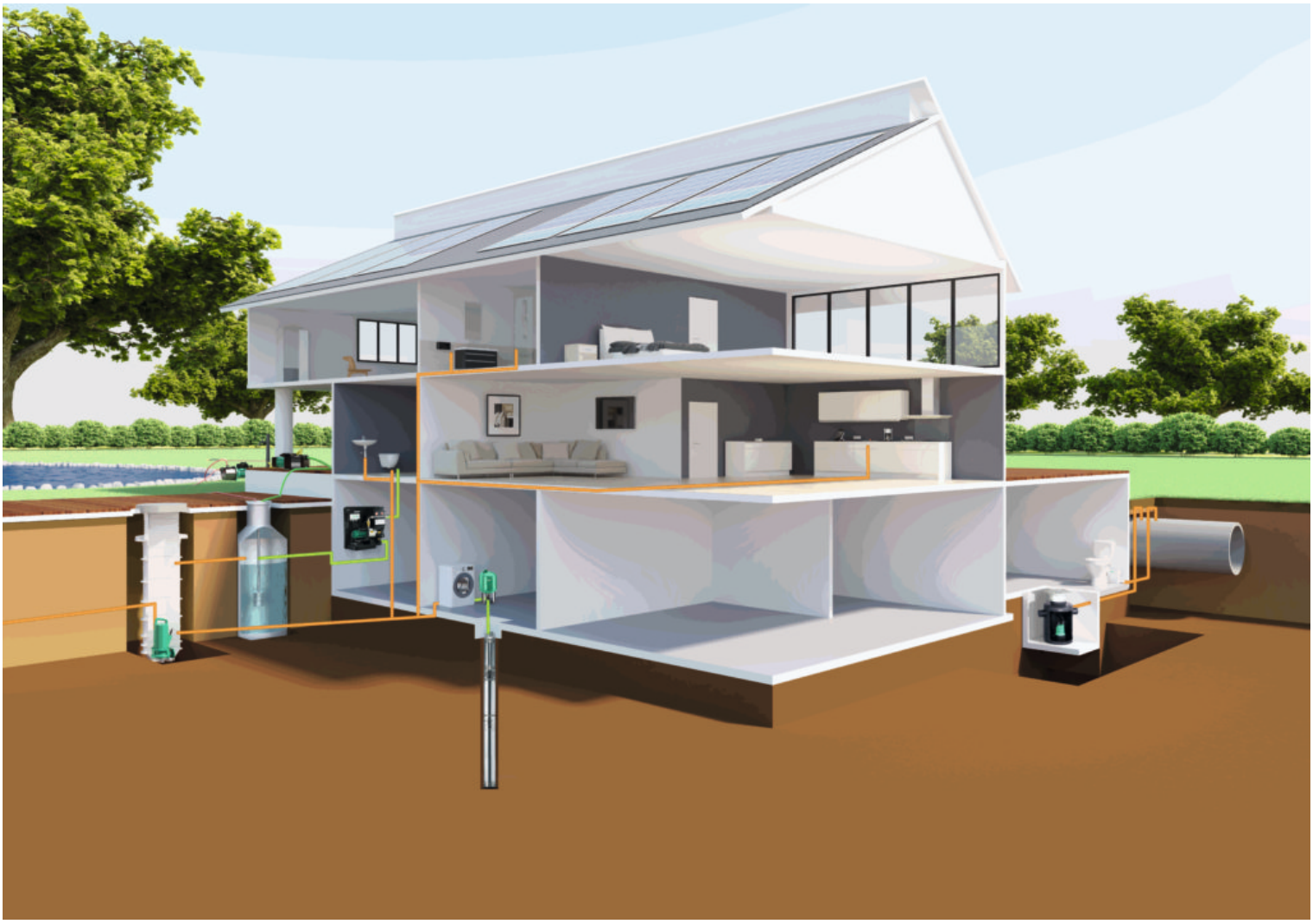

Oplossing / Solution 1

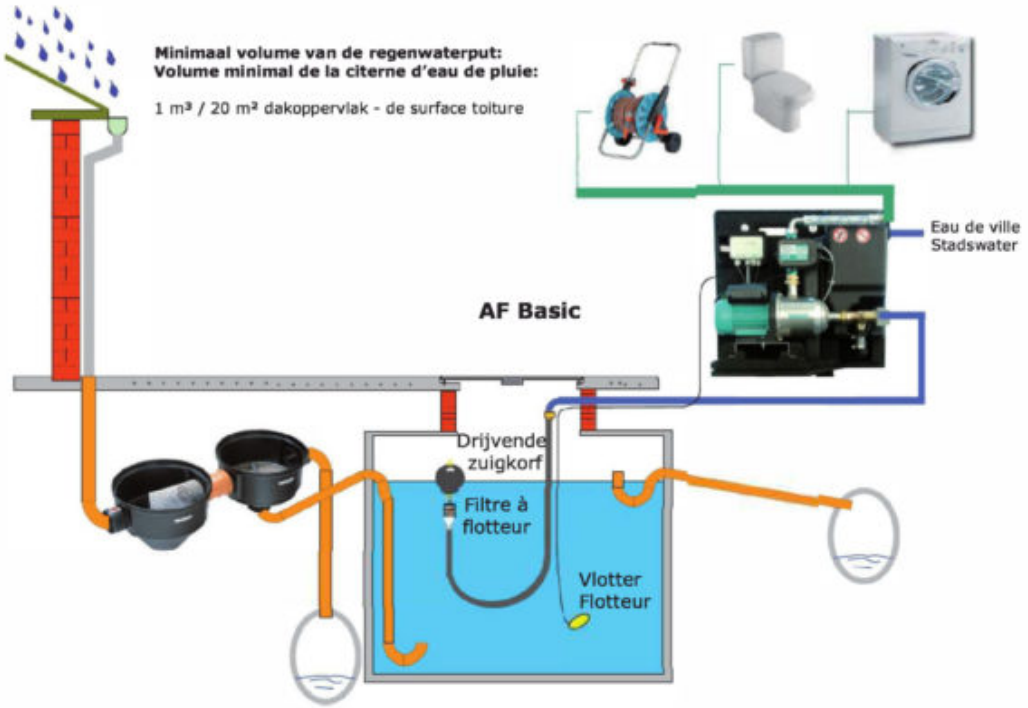

Oplossing / Solution 2

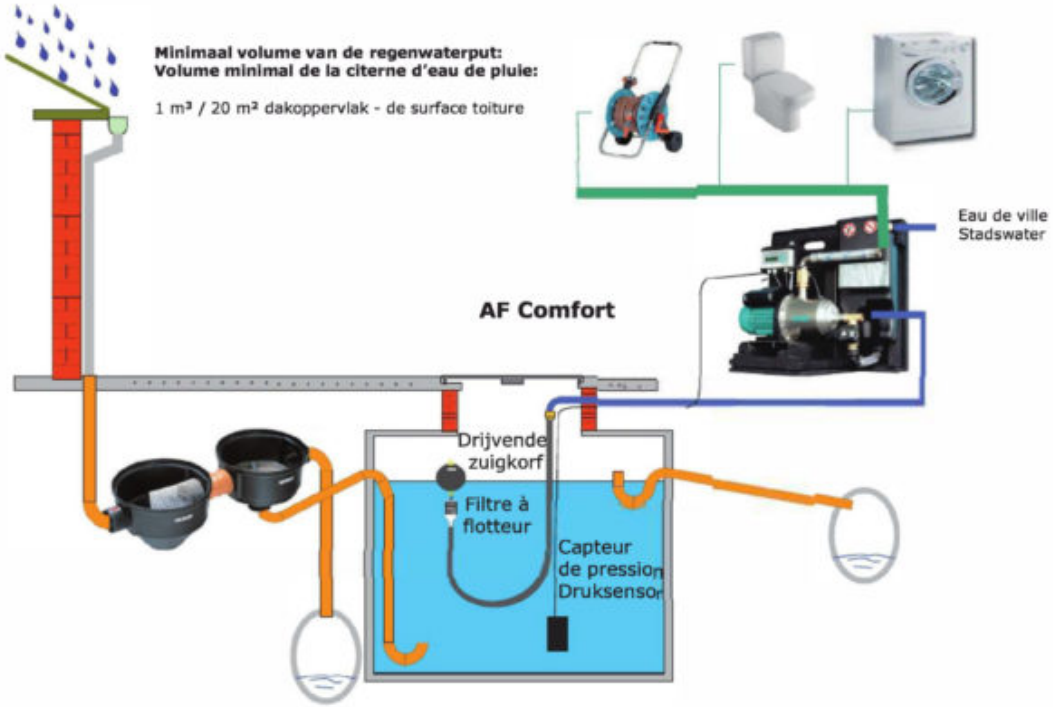

Oplossing / Solution 3

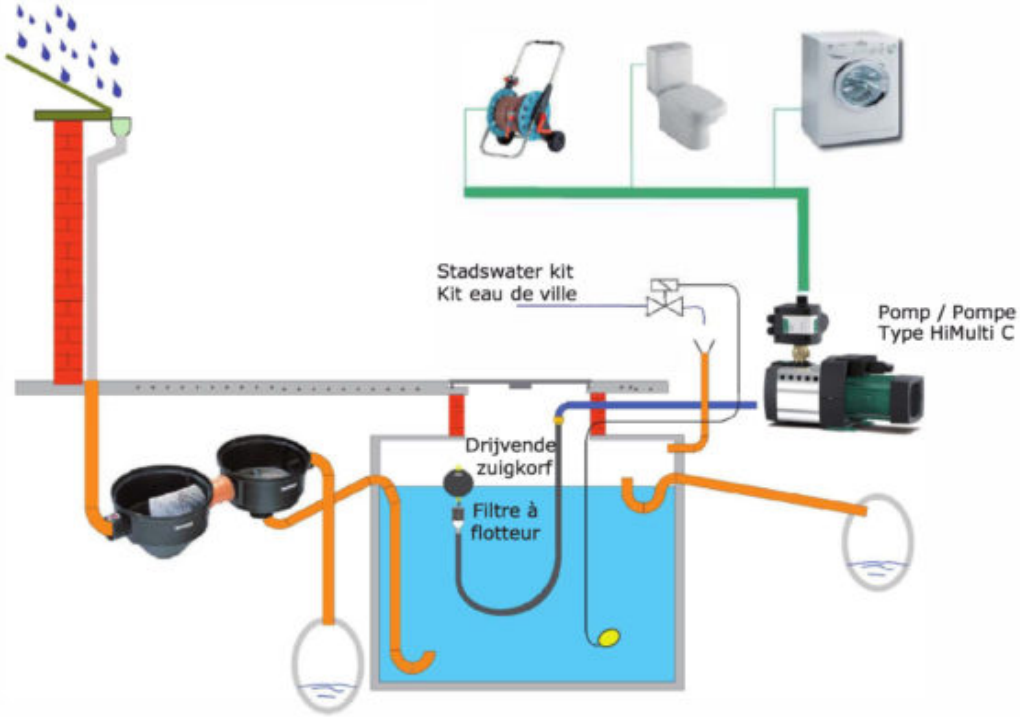
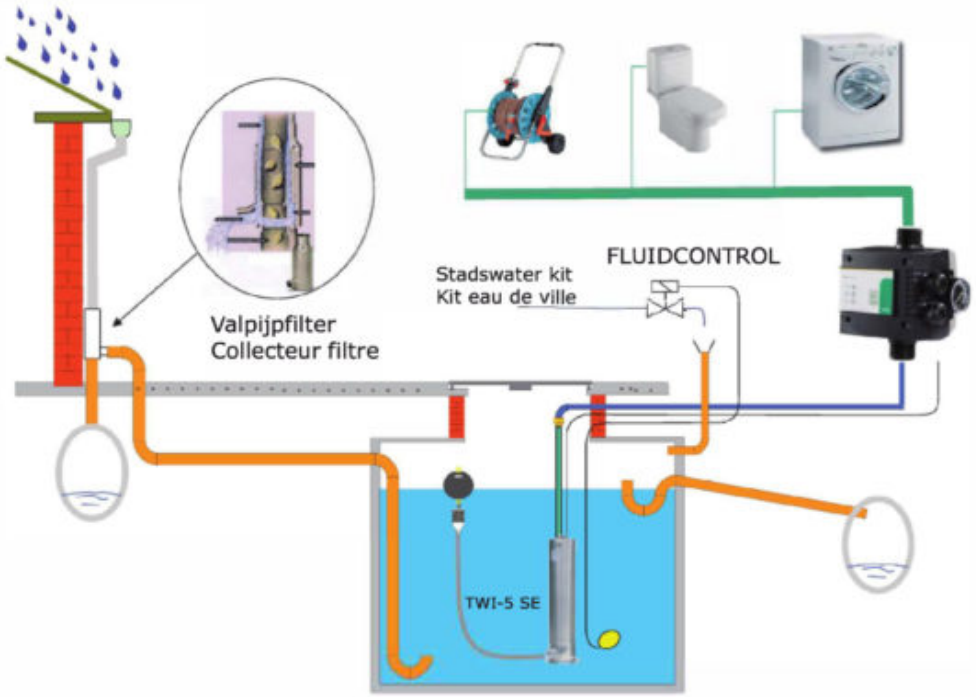
Oplossing / Solution 4